May
1968

45¢

Live Steam®

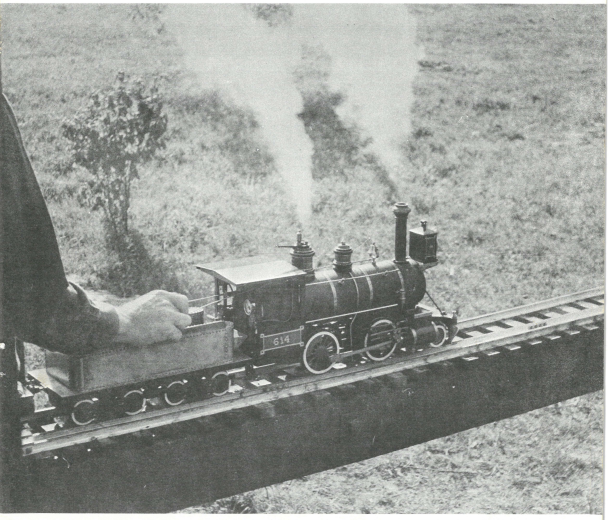

Beginning: "Building the RARITAN"— a ¾" scale Live Steam locomotive

Live Steam magazine

MAY 1968 VOL. 2 NO. 5

CONTENTS

2 *Carl Hoffman keeps alive the sound of steam in Kitchener*

4 *Joshua Tree & Southern begins Museum*

5 *No Smoke on the C&LC?*

6 *Live Steam News All Steamed Up*

7 *Live Steam News Scheduled Meets*

8 *Building the RARITAN*

13 *So You Want To Build A Live Steam Locomotive*

18 *Mail Stop*

19 *. . . from the cupola*

COVER PHOTO — Bill Morewood begins a series of articles covering the construction of the 2–4–0 on this month's cover. The article begins on page 8 and if you want castings and full-size drawings to work from see page 19.

SUBSCRIPTIONS start with January, May or September issues: $4.50 per year in U.S.A. and Canada (U.S. Funds) $5.50 per year (U.S. Funds) in other countries.

COPYRIGHT© 1968 LIVE STEAM. All rights reserved. This magazine or parts thereof may not be reproduced in any form without permission in writing from the publisher. Printed in U.S.A. PUBLISHED MONTHLY by William C. Fitz, 1285 North Twenty-Seven Road, Cadillac, Michigan. PUBLISHER'S ADDRESS ALL MAIL to: LIVE STEAM, Post Office Box 655, Cadillac, Michigan 49601. Phone 616 — 775-4525.

APPLICATION TO MAIL AT SECOND CLASS POSTAGE RATES IS PENDING AT CADILLAC, MICHIGAN.

Carl Hoffman keeps alive the sound of

Back in 1962, Carl Hoffman was involved in an extensive HO-gauge layout with a nagging love of steam urging him along. That was the year, though, when he decided to try his hand at Live Steam . . . and the whole picture changed!

Carl first tackled a ¾" B & O "President" designed by H. J. Coventry which required about four years to complete. It's a beautiful engine, a good steamer and will pull 4 to 6 men with ease . . . and ¾" scale is easy to put in the trunk of the car for travelling to meets.

He laid 265 feet of 3½" gauge track in the back yard with curves of 19 feet and 25 feet in radius which is adequate for his 4–6–2 but would need to be increased to 35 or 40 feet radius for operation of 4–6–4's or 4–8–4's. It is laid on the ground because Carl feels it is safer, it looks more authentic and it can include grades and tunnels. A stretch of 3% grade provides plenty of "stack music" with a good load behind the 4–6–2.

Last summer, though, Carl was faced with an offer of three acres in Kitchener's "Doon Pioneer Village" which resulted in the purchase of a 7¼" gauge 4–4–0 built by Jim Turnbull in Montreal along with some cars and the laying of 840 feet of mainline track plus facilities. An engine house was built and includes storage tracks for the rolling stock and Carl now spends his weekends pulling "kids from 3 to 93" around the track.

"SPARKS AND CHIPS" is the name of the house organ at Electrohome Ltd. where Carl is involved in building sample models of the latest advances in electric motors. A fine write-up in a recent issue should whet the appetite of any other potential Live Steamers in Kitchener. A couple of his co-workers and Carl's two sons, Bruce and David, helped with the trackwork for the 7¼" track.

Carl rolls out the Red Carpet for visiting Live Steamers with or without equipment for 3½" or 7¼" gauge. Drop a line a week or two in advance of your trip, though, and make sure that he will be available. You'll see plenty of Steam In Kitchener!

STEAM IN KITCHENER

KITCHENER-WATERLOO RECORD PHOTO

Live Steamer Carl Hoffman (centre) with his son, Dave (left) and his grandson, John at the throttle, take a trip over the newly completed 7¼" gauge track at Kitchener's "Doon Pioneer Village." (above)

Carl's 4-6-2 Pacific gets a workout on his 3½" track around his home at 25 Thomridge Crescent, Kitchener, Ontario as Carl takes a couple of the neighborhood children for a short trip. (left)

In a picturesque setting, the old-style enginehouse seems right at home and the "Miniature Grand Trunk" recalls the days when steam ruled the rails through Kitchener. (right)

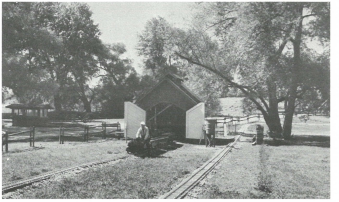

JOSHUA TREE & SOUTHERN RAILROAD CLUB BUILDS MUSEUM

January 22nd, 1968, was the date of arrival of ex-Southern Pacific caboose #529 at the newly-laid Museum Track of the Joshua Tree & Southern Railroad Club. The car will be a club room for member work crews as the museum is built and engineering is done on the 15" gauge Scenic Railway and Tram Line which will serve the Joshua Highlands Club.

Founder of the JT&S RR Club, Joel Tedder, quotes statistics which are staggering but which reveal the potential of developing the largest Live Steam Club operation in the Southwest.

The site is on the border of the Joshua Tree National Monument in the Little San Bernardino Mountains at an altitude of 3400 feet, a climatic zone ideal for year-round retirement living. Yucca Valley, seven miles to the west, and Joshua Tree are already established as retirement centers.

The Joshua Highlands Club is to become a "whole family" recreational complex with approximately 300 acres to be divided into "High Desert" homesites. The remainder of the 560 acres under option will become a permanent recreational reserve. There is a canyon, mountain peaks and ridges, and north slopes covered with pinon pine. Scenery is rugged with much of the plant live being evergreen. Members will be encouraged to come for a weekend or to stay for a lifetime.

The townsite is to be a model of a Western Mining Town. The Museum will resemble a string of cars parked at the end of a spur line, the point where one would change to the narrow gauge railroad. The JT&S tracks will loop around to gain altitude, cross the canyon on a trestle, circle a plateau to enter a tunnel which will exit on the canyon wall. Several hundred feet along a ledge will bring the tracks into the inner valley, there to circle again to gain altitude ending up at the foot of the mountain where the hiking and riding trail will begin. A "Mountain Division" could be built later to climb 500 feet to a ridge where site for a hotel or lodge and a youth camp are reserved.

The railroad is to be a 4/10 scale model of a Narrow Gauge Mining Railroad. Members will be encouraged to model the mining and logging railroad equipment as it was used in the Southwest. Models of the "Skunks" and "Galloping Goose" will run regular schedule during the week, carrying passengers (members in residence) from stations in residential areas to the "town," post office, several recreation centers and the guest parking lot.

Steam engines would probably be fired up on Friday evening, to run for the weekend carrying a heavy guest load. Guests would move on

JOEL TEDDER

Charter Members John Mueller (1) and Joel Tedder spike 70# rail for Museum track and moved in ballast with pick up truck and wheelbarrow. Southern Pacific caboose #529 was trucked 125 miles from Mojave to be used as a club room

daily passes with the privilege of stopping over at any of the recreation areas.

Land is reserved for a station, roundhouse, yards and locomotive shops. Both 15" and 7½" gauge runs are planned. Members will be encouraged to leave model equipment in permanent storage. Regular run dates and schedules will be set aside for privately-owned member locomotives and equipment.

The JT&S RR is to be owned and operated by the Charter Membership. Other Live Steamers may come in on annual passes. Associate Members will receive the Club Bulletin and an invitation to the annual club meets, probably one each spring and fall. This is to be a real operating railroad with trains running on schedule 365 days of the year. Train crews will come from among the retired rail fans and railroad employees in residence.

Tedder admits that the club planned will cost a lot of money but what is spent on the railroad will reduce other recreational expenditures. "Railroading is the finest hobby interest we can find," he says, "for the men with modeling and mechanical skills. This is to become a haven for railroad men from all over the country."

A syndicate is to be formed to handle subdivision of cabin and home sites along the tracks. Architectural controls will insure that style and scale of buildings facing the tracks and town will fit the theme - a model of western mining country.

The ownership group is now being formed. Charter Members are making loans to buy the club cars and to set them up. Plan is to incorporate soon. Meetings will be scheduled monthly at the caboose, probably the second full weekend of each month. Other work sessions and campouts are scheduled by appointment only at the present.

A call is out now for a retired rail fan or Live Steamer who can serve as resident caretaker. He must have a California Code Approved trailer coach equipped with bath. A special parking space will be built for him. Preference will be given to one who wishes to enter the Charter Group. For further information contact Joel Tedder, 4241 E. Live Oak Ave., C 7, Arcadia, California 91006. Phone 213 – 447–0886.

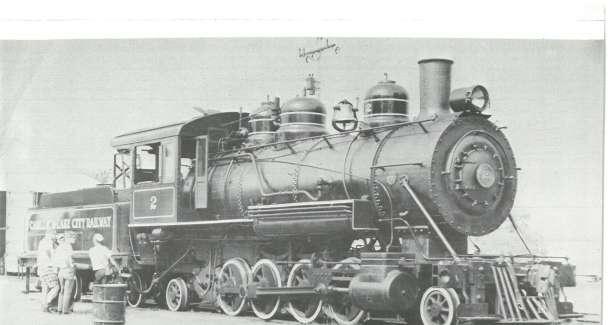

PHOTOS BY GEORGE ATCHISON

No Smoke on the C & LC?

There's no smoke drifting over the tracks of the Cadillac & Lake City these days . . . and such a beginning to a report might ordinarily bring despair to the souls of Live Steamers rather than excitement.

The Two Spot is gone, transferred by the Penn Central (who tried to conceal it in their "roundhouse" at Cadillac for a couple of days) in a midnight move to the Ann Arbor (DT&I) for the trip to their shops in Owosso, Michigan. There the running gear was completely reworked, wheel tires turned, new boiler jacket and lagging applied, all woodwork in the cab restored and the tender has new trucks and side-plates for the tank. With a brand-new paint job the Two Spot will head for the Chicago area where she will spend several summer months kicking up her heels in front of the United Artists cameras for scenes in a forth-coming movie.

The C&LC won't be without steam to delight this summer's touring Live Steamers – Fred Steck's *wood-burning* 2–6–2 (ex-Florida & Alabama #18) will take over the chores sometime in May and continue until the Two Spot returns to the C&LC rails in August. Fred has spent the past four years restoring the 1921 Baldwin engine to its original splendor and the #18 will make a beautiful sight as it wends its way through the woods from Missaukee Junction to Lake City.

Carlton Johnson and Ed Seeley (the C&LC's regular engine crew) will be with the Two Spot during the summer and Live Steamer George Atchison has been promoted to the right-hand side of the cab. George has spent his weekends and vacations from his duties at the Dow Chemical Company in Midland, Michigan, as extra fireman on the C&LC during the past few years. His promotion left the C&LC without a fireman for weekend steam runs and, although it will change the LIVE STEAM Staff's plans for attending some early summer meets, your Editor has signed on for this place in the crew! After all, such an opportunity doesn't come along often in this day and age . . . and any other Live Steamer faced with this offer would, no doubt, seriously consider it for a second or two and make the same decision!

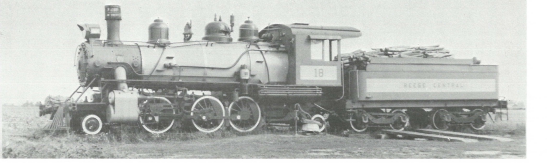

NOMINATIONS CLOSED!

Unless someone steps forward quickly to make claim, James Banning of Honolulu will receive The Dubious Award for being the first Live Steamer to have a B-47 land on top of his private airplane!

According to the GGLS *CALL BOY*, Jim recently suffered this hair-raising experience and although his plane was demolished he fortunately escaped with only minor injuries.

NEW 1½" TRACK AT PVLS

The Pioneer Valley Live Steamers are working like beavers to complete installation of all new aluminum rail on their 15⁰ facilities for the Spring Meet May 17–18–19. All the old steel rail has been removed, even up to the turntable, and new aluminum rail installed. All switches are newly constructed and the entire roadbed has been ballasted with trap rock. The new 7¼" track represents over a year of hard work for the PVLS members and Live Steamers will be anxious to try it out.

"SOUTHERN STEAM" TELLS OF PROGRESS IN MID-SOUTH

A new quarterly bulletin entitled "SOUTHERN STEAM" brings good news about the fast-growing Mid-South Live Steamers.

Their members now are able to run on 1000+ feet of Austin Barr's track in Whitehall, Arkansas; 500 feet of H. M. Buettner's track in Cullman, Alabama and expect to have some trackage ready in Nashville for the Fall Meet.

Austin Barr's 4–6–2, Bud Bartholemew's 4–6–0, Paul Craft's 4–6–2, H. M. Buettner's 4–6–2 and Earl Derrick's 4–4–0 form the operating 1½" motive power. Bob Wilson's I.C.R.R. 4–8–2, Paul Brien's 0–6–0, Darwin Phillips' 4–4–0, Harry Wade's 4–4–0 and Joe Ed Gaddes's 0–4–0 are in various stages of completion but betting is heavy on whether Leo Renfroe will complete his 1½" 4–4–2 or the 1⅝" 4–6–2 first!

Members Avery Land, Lynn Lowe, Les Gard, Jack and LeRoy Nessen are all studying the kits available and the results are sure to be additional locomotives, some rolling stock and some stationary steam equipment in the near future. The Nashville Chapter still meets monthly at various members' homes and has drawn out several potential Live Steamers in that area. For further information contact Joe Ed Gaddes, Secretary Mid-South Live Steamers, R.F.D. 5, Lipscomb Drive, Franklin, Tennessee 37064.

NEW FEATURE ON THE LIGHTER SIDE

The adventures of Hi-Ball Harry get their start in this issue of LIVE STEAM. They are the work of Robert F. Ritenburg whose home is in Niagara Falls, New York... but is currently serving with Uncle Sam's Navy.

Bob's cartoons express very well the aspirations and exaspirations of Live Steamers and his subjects are both typical and topical. We can't promise one in every issue but they will be coming along as often as we can get them into the space we have. We hope that you, too, will enjoy them.

Cartoonist-Live Steamer Bob Ritenburg captures the spirit of the Hobby in his presentation. If they don't make you chuckle, they may start you thinking! You will see more of his work in forthcoming issues of LIVE STEAM.

HARPUR'S BIZARRE SITUATION

After receiving several letters requesting information about the Harpur Locomotive Works, we did some checking and were finally able to talk with Bob Harpur by phone.

Bob briefly explained the circumstances which have temporarily closed down the Harpur Locomotive Works. These seem to be circumstances beyond his control and this was verified in contacts with others close to the situation.

We have been assured that everything possible will be done to keep moving those Harpur locomotive projects which have been started and to fill all orders for parts that have been placed.

We discussed with Bob the need to keep the many involved Live Steamers posted on the true circumstances and suggested that if he did not have adequate staff to handle his correspondence, he could make regular reports through the columns of LIVE STEAM.

We sincerely hope he will do so.

In the meantime it may be well ('though difficult) to refrain from repeating "he-said's" and "I-heard's" which can quickly lose proportions with this language of ours. Let's not "bang" a fellow Live Steamer with rumors. Let's count on Bob to give us the facts about the circumstances as quick and often as is feasible. Judgement in retrospect is far superior to any advance judgement.

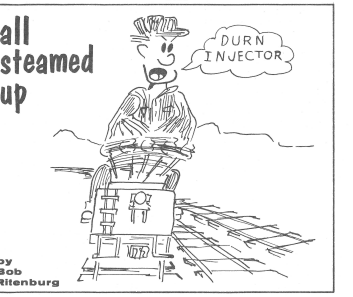

CALDWELL INDUSTRIES ENTERS LIVE STEAM FIELD

The Live Steam Hobby takes another step forward with the announcement of formation of the Caldwell Industries in this issue of LIVE STEAM Magazine.

This new firm will show representative items from their line in a series of ads appearing in LIVE STEAM each month. At first their address will not be given; they are busy stocking their shelves and preparing their catalog. They expect to "open their doors" in a few weeks.

Their scope is broad and their products of particular interest to participants of Live Steam as well as other phases of the modelmaking hobbies.

We invite you to watch for their announcement in future issues of LIVE STEAM Magazine!

May

17 PIONEER VALLEY LIVE STEAMERS
18 Annual Spring Meet
19 3½" – 4¼" – 7½"
Brenton W. Bomfather, Secy.
3 Fleetwood Drive
Sandy Hook, Conn. 06482

25 GOLDEN GATE LIVE STEAMERS
26 Annual Spring Meet
2½" – 3½" – 4¼" – 7½"
Ron Downer, Secy.
1274 36th Avenue
San Francisco, California 94122

30 PENNSYLVANIA LIVE STEAMERS
31 Annual Spring Meet
1 2½" – 3½" – 4¼"
2 Frank H. Moore, Jr., Secy.
211 Walnut Avenue
Wayne, Pennsylvania 19087

30 LOS ANGELES LIVE STEAMERS
31 Annual Spring Meet
1 3½" – 4¼" – 7½"
2 Harry Harper, Secy.
4 Rawhide Lane
Rolling Hills Estates
California 90274

June

14 NEW JERSEY LIVE STEAMERS
15 Annual Spring Meet
16 3½" – 4¼" – 7½"
Ralph Green, Secy.
Phone 201 – 353-4424
845 Kilsyth Road
Elizabeth, N. J. 07208

August

24 GOLDEN GATE LIVE STEAMERS
25 Annual Fall Meet
2½" – 3½" – 4¼" – 7½"
Ron Downer, Secy.
1274 36th Avenue
San Francisco, Calif. 94122

BINDING SERVICE FOR LIVE STEAM SUBSCRIBERS

Your back copies of LIVE STEAM can now be bound into a hard-covered permanent reference book as result of arrangements completed recently.

Standard binding will be a dark green buckram with the title and the LIVE STEAM logo permanently stamped in gold leaf.

Volume One will include all of the 1967 issues plus the five issues published in 1966 as Volume Six of the Live Steam Newsletter.

The charge for this service is $7.50 if you supply your copies of the magazine or $12.00 if we furnish bound sets of the magazines from our diminishing supply. We will furnish missing copies for your set at 35¢ each as long as the supply lasts.

Don't forget to include the Index published as a supplement to the March 1968 issue of LIVE STEAM and send them with your check to LIVE STEAM, Box 655, Cadillac, Michigan, 49601. Allow six to eight weeks for return of your bound copies.

31 PENNSYLVANIA LIVE STEAMERS
1 Annual Fall Meet
2 2½" – 3½" – 4¼"
Frank H. Moore, Jr., Secy.
211 Walnut Avenue
Wayne, Pennsylvania 19087

September

20 NEW JERSEY LIVE STEAMERS
21 Annual Fall Meet
22 3½" – 4¼" – 7½"
Ralph Green, Secy.
Phone 201 – 353-4424
845 Kilsyth Road
Elizabeth, N. J. 07208

October

11 PIONEER VALLEY LIVE STEAMERS
12 Annual Fall Meet
13 3½" – 4¼" – 7½"
Brenton W. Bomfather, Secy.
3 Fleetwood Drive
Sandy Hook, Conn. 06482

Regular Run Days

GOLDEN GATE LIVE STEAMERS
Every Sunday, weather permitting
2½" – 3½" – 4¼" – 7½"
Ron Downer, Secretary
1274 36th Avenue
San Francisco, Calif. 94122

JAMUL VALLEY RAILROAD CLUB
3rd Sunday of each month
7½" gauge
Charles Underhill, Secretary
4675 Coronado Avenue
San Diego, Calif. 92107

LOS ANGELES LIVE STEAMERS
1st Saturday & Sunday each month
3½" – 4¼" – 7½"
Harry Harper, Secy.
4 Rawhide Lane
Rolling Hills Estates,
California 90274

NEW JERSEY LIVE STEAMERS
1st & 3rd Sundays each month
3½" – 4¼" – 7½"
Ralph Green, Secretary
Phone 201 – 353-4424
845 Kilsyth Road
Elizabeth, N. J. 07208

VINTAGE LOCOMOTIVE SOCIETY REPORT

If you have followed the reports of activity in Winnipeg that have been made in LIVE STEAM Magazine, you are aware that the Live Steamers there have been working hard... awful hard... to keep City of Winnipeg Hydro #3 in operation instead of being parked on fifty feet of rusty track in a city park.

Their efforts were finally successful and they were given custody of the 1882 4–4–0, obtained operating rights on a branch line of the C.N.R. and formed the *VINTAGE LOCOMOTIVE SOCIETY, INC.*, to operate the equipment for our pleasure. To raise capital for insurance and supplies the Society offered "Membership Certificates" for a dollar but the response has not been all that was hoped for. At last report a total of fourteen (count 'em, *fourteen*) Live Steamers had responded to the call and John LePage writes:

"We intend to press on regardless and hope to pay our bills from initial revenues. Keep your fingers crossed.

"We have all agreements signed and we are ready to highball on May 19, 1968."

To our knowledge, *Old #3* is the oldest operating standard gauge steam locomotive around and it would be a shame to see this effort go for naught. So why not give it some thought... and before you cross your fingers put a dollar in an envelope and send it to Vintage Locomotive Society, Inc., c/o John LePage, 471 Waverly Street, Winnipeg 9, Manitoba, Canada. That certificate will look fine, framed and hung over your workbench... and you will have had a part in the preservation and operation of Old #3.

PENNSYLVANIA LIVE STEAMERS
2nd Sunday, May thru October
2½" – 3½" – 4¼"
Frank H. Moore, Jr., Secy.
211 Walnut Avenue
Wayne, Pennsylvania 19087

RIVERSIDE LIVE STEAMERS
4th Saturday & Sunday each month
7½" gauge
Merril Van Noty, Secretary
677 Flynn Street
Riverside, Calif. 92507

SOUTHERN CALIFORNIA LIVE STEAM CLUB
3rd Sunday each month
3½" – 4¼" – 7½"
K. G. Kepner, Secretary
2764 Maple
Rialto, California 92376

WAUSHAKUM LIVE STEAMERS
2nd Sunday each month 8 a.m.-4 p.m.
3½" gauge
Wendell C. Bishop, Secy.
52 Pond Street
Natick, Mass. 01760

building the RARITAN

A builder of Live Steam boat models during high school days, Bill Morewood started building his first Live Steam locomotive in 1940 while studying mechanical engineering in college. Construction was suspended upon graduation when a three-year tour of duty in the U. S. Navy took him to the Indian and Pacific Oceans.

His first locomotive, a 3/4" scale 4-4-0, finally pulled its first passenger in 1952 and has since steamed many miles.

The design of the second engine, the 2-4-0 RARITAN, was begun in 1960 and the prototype was first steamed up a few years later. At the present time, three of these locomotives have been completed and a fourth is running on air.

Bill has been a member of the Pennsylvania Live Steamers for the past 20 years and of the New Jersey Live Steamers for the past 5 years.

Employed as a Mechanical Engineer by an electronics manufacturer, Bill designs research equipment. He and his wife and family live near Trenton, New Jersey.

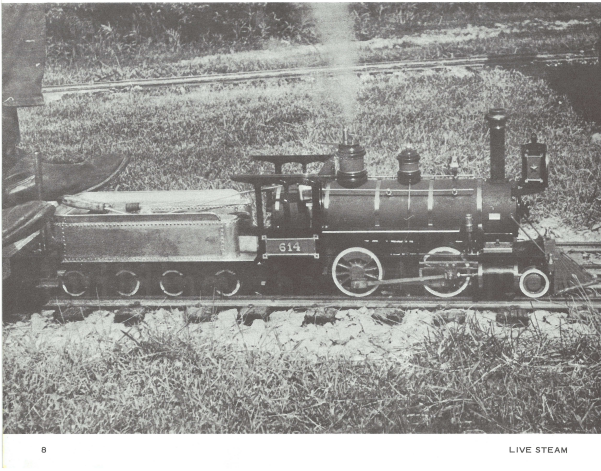

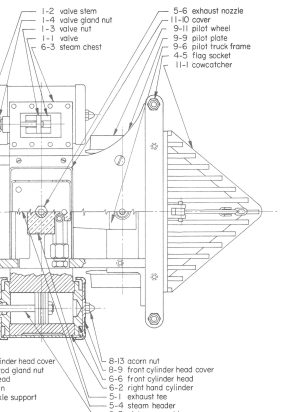

by William H. Morewood

This locomotive is patterned after a type built by the Baldwin Locomotive Works in Philadelphia about 1875. These engines were quite light and were used mainly for local service and switching. Probably the best known is the *J. W. Bowker* which was built originally for the Virginia & Truckee Railroad in Nevada.

The model is similar in appearance to the *J. W. Bowker* although some dimensions and certain mechanical features have been changed to improve its performance as a small Live Steamer. This engine will pull two adults though its total weight is only about 40 lbs. Other specifications are as follows:

Bore and Stroke	7/8" x 1¼"
Driver Diameter	3¼"
Valve Gear	Slip Eccentric
Boiler	Copper with brazed joints
Steam Pressure	100 PSI
Grate	2" x 4"
Fuel	Coal
Feed Water Supply	Mechanical pump on the engine, hand pump in the tender

This engine was designed to be built on a 9" lathe with a milling attachment. If you have a milling machine, so much the better. It is necessary to take light cuts when using a milling attachment and this goes very slowly. A drill press and grinder and the usual assortment of hand tools are also needed.

Iron castings are available for the wheels, cylinders, steam chests, slide valves and piston rings. Brass castings are available for the eccentric straps and for a tee-shaped piece that fits between the cylinders and supports the smokebox. The other materials needed are cold rolled steel, stainless steel, brass, copper and phosphor bronze. They are commercial sizes and may be purchased locally.

A torch capable of melting silver solder is needed for brazing a good

1

many assemblies and also for brazing the boiler. These jobs can be done with a Prest-O-Lite torch of the type normally used for plumbing work. Silver solder and *"Handy Flux"* are available from Handy & Harman. The names of distributors and technical information may be obtained by writing Handy & Harman, 850 Third Avenue, New York, N. Y. 10022. Their 3/64" diameter *Easy-Flo* wire is fine for assemblies of brass, copper, steel or stainless steel. The 1/16" diameter *Sil-Fos* wire is easier to use when brazing copper boilers. *Sil-Fos* is used for non-ferrous metals only.

Full-size detail drawings are available for all the parts (the drawings presented in LIVE STEAM will be half-size) and since this is the case only those parts which require unusual setups or on which special care should be taken will be described. Though few tolerances have been given, it is best to work as close to the actual decimal dimensions as possible. Any extra time spent will be more than repaid when you come to the assembly.

The amount of time required to build a locomotive depends to a large degree on the experience of the builder and on the equipment available. For this engine it might take a person familiar with machine shop work about 800 hours.

Most locomotives, including this one, burn coal. Larger models will run ten minutes or more on one firing while an engine of this size must be fired much more frequently. Like the full-sized locomotives, these, too, throw cinders and sparks and you may find it desireable to wear some sort of goggles.

3/4" scale engines run on track which measures 3½" (+1/16 –0) between the rails. This gauge is found on most club tracks and its dimensions are standard throughout this country and the world.

A 2–4–0 wheel arrangement makes a good working model. Almost all the weight is carried on the two driving axles and a rather large firebox may be used.

Since this engine is small and light, it may easily be carried by one man and may be stored on a shelf or mantlepiece. Replicas of locomotives built in the 1800's make attractive models as many of the originals had bright red cowcatchers and wheels, a good deal of polished brass and brightly painted cabs and tenders.

The Elevation and Chassis Plan drawings are published this month so that you can get acquainted with the project. Next month we will start out with the Valve Gear and the Feed Pump Assembly and begin construction of the *Raritan* in earnest.

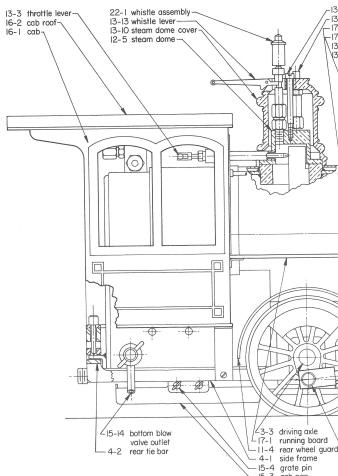

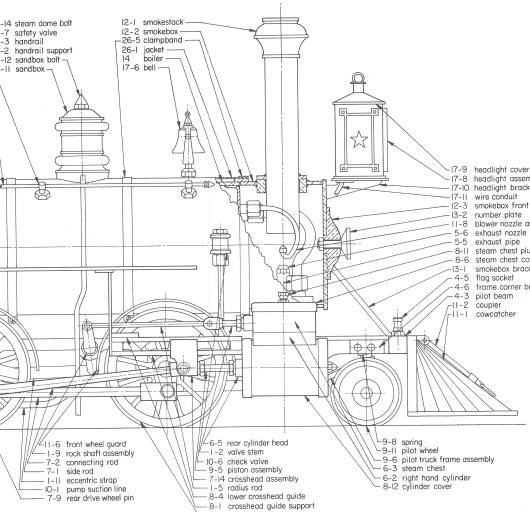
-14 steam dome bolt
-7 safety valve
-3 handrail
-2 handrail support
-12 sandbox bolt
-11 sandbox
12-1 smokestack
12-2 smokebox
26-5 clamband
26-1 jacket
14 boiler
17-6 bell
17-9 headlight cover
17-8 headlight assembly
17-10 headlight bracket
17-11 wire conduit
12-3 smokebox front
13-2 number plate
11-8 blower nozzle assembly
5-6 exhaust nozzle
5-5 exhaust pipe
8-11 steam chest plug
8-6 steam chest cover
13-1 smokebox brace
4-5 flag socket
4-6 frame corner brace
4-3 pilot beam
11-2 coupler
11-1 cowcatcher
11-6 front wheel guard
1-9 rock shaft assembly
7-2 connecting rod
7-1 side rod
1-11 eccentric strap
10-1 pump suction line
7-9 rear drive wheel pin
6-5 rear cylinder head
1-2 valve stem
10-6 check valve
9-5 piston assembly
7-14 crosshead assembly
1-5 radius rod
8-4 lower crosshead guide
8-1 crosshead guide support
3-4 driving wheel
9-8 spring
9-11 pilot wheel
9-6 pilot truck frame assembly
6-3 steam chest
6-2 right hand cylinder
8-12 cylinder cover

2

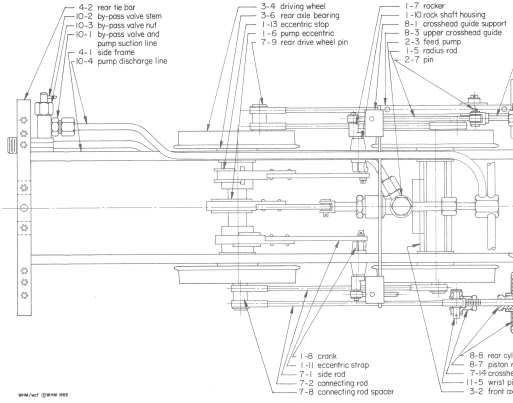

4-2 rear tie bar
10-2 by-pass valve stem
10-3 by-pass valve nut
10-1 by-pass valve and pump suction line
4-1 side frame
10-4 pump discharge line
3-4 driving wheel
3-6 rear axle bearing
1-13 eccentric stop
1-6 pump eccentric
7-9 rear drive wheel pin
1-7 rocker
1-10 rock shaft housing
8-1 crosshead guide support
8-3 upper crosshead guide
2-3 feed pump
1-5 radius rod
2-7 pin
1-8 crank
1-11 eccentric strap
7-1 side rod
7-2 connecting rod
7-8 connecting rod spacer
8-8 rear cyl
8-7 piston r
7-14 crosshe
11-5 wrist pi
3-2 front ax
WHM/wcf ©WHM 1965

THE BOILER: FEATURES AND DESIGN

SO YOU WANT TO BUILD A LIVE STEAM LOCOMOTIVE

by Joseph F. Nelson

CHAPTER 9

FLARED TUBE ENDS

Flared tube ends do improve flue gas flow through the boiler tubes; however, there is some tendency on Live Steam coal burners for pieces of half-burned coal to lodge in the flare on the firebox end of the tube.

MOUNTING HANDRAIL BRACKETS

The following method is just one way of doing the job, but it is simple and it works:

Layout and drill the boiler barrel where handrail brackets are desired. Use brass pipe plugs for copper boilers and iron pipe plugs for steel boilers. Blind tap each pipe plug to accommodate each bracket stud. To prick punch the correct location of each bracket in the boiler jacket, make removable prick punches for each pipe plug. Install the boiler jacket temporarily in its correct position over the insulation and impress all the prick punch marks on the inside of the boiler jacket by gently tapping each prick punch location with a soft mallet. After all holes are located, remove the boiler jacket and drill all the bracket stud clearance holes from the jacket inside with the jacket against a wood block. Remove and discard the prick punches. The boiler jacket will be ready for installation on the boiler when all the holes for fittings, etc., have been drilled in the jacket. Make certain to use the butterfly drill when drilling holes in the jacket and other thin sheet metal. This will prevent damage to the work and possible injury to the drill operator.

LOCATION OF THE CROWN SHEET

Many Live Steam locomotive builders make the mistake of scaling down the crown sheet from prototype. This is frequently done to play "Simon Pure" and also to get the minimum possible number of tubes. This is wrong for two reasons:

(1) Since steam bubbles that form on the surface of boiler water do not scale down, (they are just as big in Live Steam boilers as they are in prototype boilers), it is important that there be as much steam space as possible above the normal water level to permit bubbles to dissipate before they enter the dry pipe. By locating the crown sheet at about the center line of the boiler barrel, a compromise is reached between the maximum possible steam space and the minimum number of boiler tubes. To visualize the boiling water phonomenon, place a pan of clean water on the kitchen stove and bring it to a violent boil, then observe the size of the bubbles. This will give one an idea of what happens in a boiler with insufficient steam space. Incidentally, impurities found in water in different parts of the country will augment this condition and cause violent ebulition which is frequently evident when the water level is at the top of the gauge glass. Since there is less steam above the water level in the smaller boilers than there is in the larger 1½" scale boilers, the moisture carry-over to the cylinders is naturally more prevalent in the smaller engines.

(2) It is natural that one would desire all the heat transfer surface possible, with the result that the novice builder will attempt to fill the boiler with nothing but tubes at the expense of steam space. It has been found that when the Live Steam boiler crown sheet is on about the center line of the boiler barrel, a sufficient number of tubes can be put into the back tube sheet to provide an optimum amount of steam. The slight heat gain from another row of tubes would be over-balanced by the loss of valuable steam space.

THE TUBE NEST

When laying out the tube sheets, the ideal arrangement is to stagger the tubes. However, there are times when space limitations dictate that tubes in the row above be placed directly over the tubes in the row beneath. While this is not the optimum condition, it is good design and is used on large boilers. Tubes at the very bottom of the front tube sheet perform satisfactorily on oil burners or liquid petroleum (L. P.) gas burners, but they are hardly worth their installation on a coal burner. On a coal burner, they plug with ash and cinders starting at the smokebox working back. Since this only deletes or relocates a couple of tubes, enough tubes can be still put into the available space to provide more than sufficient steam. The following is this writer's recommendation for tube size: ¾" scale – 3/8 to 1/2" OD; 1" scale – 1/2" to 5/8" OD; and 1½" scale, Early Americans, treat the same as 1" scale; medium size 1½" scale, 5/8" and/or 3/4" OD.; Northerns, 3/4" and/or 1" OD.

STAYTUBES

Staytubes are used between the top of the tube sheet and the backhead to stay the unsupported surfaces. They may also have a secondary function, such as housing the blower line; and, where the headlight turbo-generator is on the smokebox, to house the turbine steam supply line. By taking advantage of staytubes (inside the boiler) to house these steam lines, condensation is eliminated. The arithmetic for staytubes is the same as that for staybolts: i.e., steam pressure supported area. The area of the staytube is: Area of OD minus area of ID. Divide the T. S. of the material by the proper safety factor. Staytube open ends must be closed to prevent air leaking into the smokebox.

STAYTUBE THROTTLE

The staytube throttle is probably the most simple and trouble-free throttle ever designed. When fabricating this throttle, the cylinder and throttle slug must be smooth and a good running fit (.001"). When the slug and bore

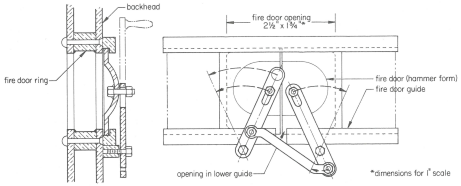

SLIDING TYPE FIRE DOOR

STRAIGHT TUBE END FLARED TUBE END

TUBE ENDS

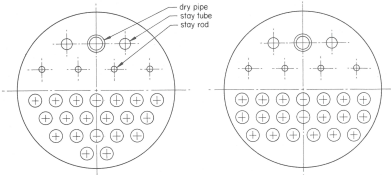

IDEAL LAYOUT RECOMMENDED FOR COAL

FRONT TUBE SHEET - 20 TUBES - FOR 1" SCALE K-4s

JFK/wct

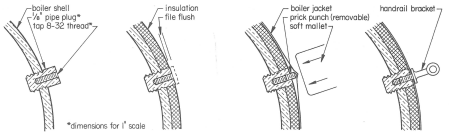

MOUNTING HANDRAIL BRACKETS

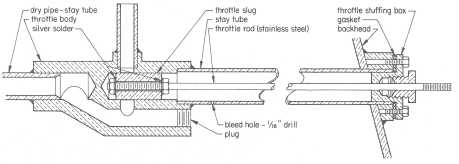

STAY TUBE TYPE THROTTLE

JFR/wd

do wear in, steam leakage to the cylinders with the throttle closed will not be enough to affect operation. The throttle shaft (stainless steel), should be a sloppy fit in the slug, and have both retaining nuts silver soldered in place to prevent their movement. A small bleed hole (1/16" dia.) must be drilled in the lower side of the staytube to prevent hydraulic lock which would result in erratic throttle action. The staytube and the drypipe-staytube must be in line, otherwise the assembly will not be of any value as a staytube.

ARCH TUBES AND SYPHONS

These are, in this writer's opinion, unnecessary refinements. They do improve the circulation and add to the fuel economy of the prototype boiler; however, they are nothing but trouble in the Live Steam boiler since they interfere with brushing out the tubes from the firebox end and prevent the installation of an arch which this writer considers more important. Also, due to their small size and high evaporation rate, they plug up with lime scale and burn out in short order unless distilled water is used. Steel arch tubes last real quick!

SUPERHEATER FLUES

Although there are quite a few used on Live Steam, superheater flues are not recommended by this writer because:

(1) Due to the return tubes inside the flues, it is impossible to brush them out and keep them clean.

(2) Since smokebox dampers are impractical on Live Steam locomotives due to space limitations, the superheater return tubes inside the superheater flues can very easily become overheated when an engine has a heavy fire going to raise steam with no steam going through the superheater return tubes to the cylinders. The smokebox superheater shown in Chapter VIII is really more of a dryer than a superheater and leaves something to be desired. However, the 2" that it steals from the boiler tubes on a 1" scale does help out, and the device gives no trouble whatsoever.

THE FIRE DOOR

One complaint the American Live Steam modelers have about the British Live Steam locomotives is that the fire doors are made to scale. This makes them rather difficult to fire, particularly in ¾" and 1" scale. The fire doors supplied by the American Live Steam equipment manufacturers are usually enough out of scale to permit easy firing on the run. Standard doors with the fire door ring are available. If the locomotive builder wishes to fabricate an excellent fire door, the sliding type is the answer since it will stay at any set opening. The vertical opening type is closer to prototype; however, due to space limitations, the horizontal opening door is recommended for Live Steam. The door as shown is definitely oversize. Where space is available, the butterfly door with a notched quadrant to hold the door open in any position is also excellent.

INTERNAL FEED LINES

Most owners of Live Steam locomotives are not aware of and do not realize the advantages of the internal feed line. With this system, feed water is pumped into a boiler through the backhead into the internal feed line. In its journey through the internal feed line, it has had time to warm up to almost boiler water temperature before it mixes with boiler water in the vicinity of the front tube sheet. This method of feed water induction has been used by the Pennsylvania Railroad since about 1900. Except where an injector or feed water heater is used, cold water is pumped into a hot boiler and this isn't good.

DOUGLAS ALKIRE

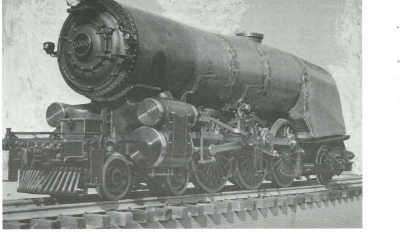

With the running gear and boiler mounted, the Live Steam locomotive begins to take shape – as does Doug Alkire's 1" scale B & O "President" shown here.

MODELS AND MODEL SUPPLIES

Steam Engines, Castings, Prints. Some machined, finished.
Miniature Spark Plugs, Fittings. Hexagon Bolts, Books, Metals. Innumerable selection.

ILLUSTRATED CATALOG — $1.25

COLE'S POWER MODELS

VENTURA, CALIFORNIA 93002

CARDS - STATIONERY - RUBBER STAMPS
BLS EMBLEM AVAILABLE
CATALOG 50¢

RAILROAD PRINTERS
Box 74-LS
Boston, Mass. 02124

WHY TAKE CHANCES?
Protect your investment and solve some operational problems as well
Use **Deminvolized Boiler Feed Water**
Send Name, Address and Zip for complete information
INDUSTRIAL SALES ASSOCIATES
1775 Glenview Rd., Glenview, Ill. 60025

LOCOMOTIVES WANTED
Complete or incomplete, Send details with photo and asking price to
¾" 1" 1½"
Pleasant Valley Railroad
5 Councilman Ave., Baltimore, Md. 21206

1½" Scale Truck Castings
$40.00 per pair
Send 25¢ for photo to
BEN NIXON
927 Woodland, Southampton, Pa. 18966

ACCURATELY SCALED
115 lb. A.R.E.A. RAIL
1½" SCALE
SEND 25¢ FOR SAMPLE TO
PAUL B. CULP
617 Fanshawe Street
Philadelphia, Pa. 19111

Please mention to advertisers that you saw their ad in LIVE STEAM Magazine.

B L S Directory
$2.25
from LIVE STEAM Magazine
Box 635 Cadillac, Michigan 49601

THE EXTRA BOARD
Items for sale or wanted to purchase by hobbyists. One free ad included with subscription, additional ads 5¢ per word with order.

WANTED

Catalogs, photos on geared locomotives –Shay, Climax, Heisler, Willamette., etc., also data on abandoned logging and industrial railroads, especially in the Southeast. Whistles In The Woods Museum, Route #1 Box 265A, Rossville, Ga. 30741.

Electric trains made before 1941. Will pay top cash. Also want Buddy-L push toys.- Al Staufer, Route 4, Medina, Ohio 44256.

Musical notes of the chime whistles used on CPR steam locomotives; namely CPR Jubilee F–la series if more than one kind of whistle was used. I wish to build a realistic-sounding whistle for my engine. W. H. Dykeman, 890 Bay Ave., Bathurst, N. B., Canada.

Coal-fired locomotive and cars 7¼" gauge. Interested only in top quality and workmanship. Jack West, Creek House, Oxford, Md. 21654.

Parts for Harpur Mogul 7¼" gauge. What have you? Joseph A. Glaudel, D.D.S., 412 Huntington Pike, Rockledge, Philadelphia, Pa. 19111.

FOR SALE

1½" scale 7½" gauge 0–6–0 switcher, new condition, copper boiler, well detailed, excellent performer, $3,000. R. C. Lippens, 535 Pine Street, Kewanee, Ill. 61443.

Mill – Horizontal – Burke #4 Robust – Pedestal – Excellent Condition. R. Fisher, 716 S. 22nd St., Arlington, Va. 22202.

RUTLAND DRAWINGS
1½" scale elevations and sections of RUTLAND RAILROAD class F–2j 4–6–0 engines. For information write to:
Walter H. Allen
962 Greenland Road
Portsmouth, N. H., 03801

1½" scale trucks, couplers, stake pockets, frogs, drivers, etc. Send 25¢ for photo and information
EVERT BRUMLEY
Route #4, Box 222
Winchester, Indiana 47394

LOCOMOTIVES BUILT TO ORDER
Machined to any stage
Torn's Machine & Engineering Co.
808 McPhaul Street
Austin, Texas 78758

3/4" – 1½" Scale
Castings, Blueprints and Materials
16 Engines in CATALOG #3 – $1.00
FRIENDS MODELS
R.F.D. Topsfield, Mass. 01983

3/4" SCALE NYC HUDSON
Castings, drawings, freight trucks, wheels, bolsters, springs. Write for list.
CARL HOFFMAN
25 Isernridge Crescent
Kitchener, Ontario, Canada

MODEL BOILERS
Built and Repaired
Also Boiler Parts Cut Out
MODEL BOILERS
Box 178 Ventura, California 93001

Black line prints from original Cooke, Manchester and Rhodes Inlaid Works tracings. Send 50¢ for the lists of drawings.
C. A. PURINTON
R.F.D. Boxford, Mass. 01921

Photos, 1½" scale erection drawings 10 CNR-CPR items from MLW-CLCo tracings, CNR Standard Detail drawings, miscellaneous prints. CATALOG #2 -35¢ contains diagram sheets of all locos.
WILLIAM DYKEMAN
890 Bay Ave., Bathurst, N.B., Canada

MINIBOLTS – Perfect little hex head miniature machine bolts in Mild Steel, Brass and Stainless Steel. #0 to #12 diameters in popular and special lengths. For "factory direct" prices write to "1900"
Sierra Swiss Product Engineering
P. O. Box 67 Fawnskin, Calif. 92333

PATTERN SELECTION ENLARGED
¾" – 1" – 1½" scale locomotives and horizontal stationary engine. Send self-addressed #10 envelope with 10¢ POSTAGE for list #6 to
Live Steam Pattern Pool
962 Greenland, Portsmouth, N. H., 03801

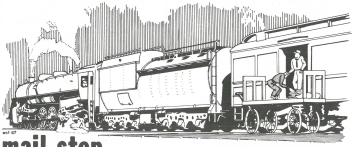

mail stop

BOILER SAFETY

First of all one comment on Mr. Joseph F. Nelson's Chapter 9, "The Boiler: Safety First, Safety Last and Safety Always" – it was excellent!

Incidentally, in spite of rumors to the contrary, the Centerville & Southwestern R. R. will again operate this year as usual, starting May 30th. This will be our Twentieth Year of public operation. At the same time we are in the process of relocating about 60% of the line due to construction of a new highway.

LIVE STEAM gets better all the time. Hope you can keep it up.

HENRY E. BECKER
CENTERVILLE & SOUTHWESTERN R. R.
ROSELAND, N. J. 07068

Mr. Nelson certainly said some things about boiler testing which needed saying and I hope every Live Steamer reads it and takes it to heart. He did not mention the principal argument that I have heard against it: that it insults a man's boiler building ability to insist on a test. Neither factor bears on the other.

FRANK H. MOORE, JR.
211 WALNUT AVENUE
WAYNE, PENNSYLVANIA 19087

AT&T, TAKE NOTE

In looking over the list of Scheduled Meets I do not see any telephone numbers. Would it be o.k. if the club secretaries had their numbers listed? (Sure – Ed.)

In this fast day and age I think it would be a help as I have had calls from visitors in Colorado, Detroit and near Chicago.

My phone is 201 – 353-4424.

RALPH GREEN
SECRETARY, N.J.L.S.
845 KILSYTH ROAD
ELIZABETH, N. J. 07208

BOY! WHAT A HOBBY!!

You are reading a letter written by a very, very, very, very, very happy young man! Last Sunday I got my 1" 0–4–0T to run perfectly. In fact, it ran so well I was on the N.J. L.S. tracks for over four hours. The more load I put on her the harder the pop went off!

Mr. Nelson's article on the Smokebox is invaluable. I have been working for over 2 months on reworking valves, ports, link rods, new stack, new petticoat, new nozzle and finally she runs!

Boy! What a hobby!! Just to sit behind and chug around smelling the coal smoke mixed with steam and oil is out of this world.

Thanks for giving us Live Steamers such a great magazine.

ROBERT HOSKINS
168 SOUTH AVENUE
HAWTHORNE, J. J. 07506

SUPERHEATER DATA

In the November-December LIVE STEAM there was an interesting letter from William Treadway on the running of his 3½" gauge 0–4–0T loco and the effect of superheat. My locomotive is much the same as the Carl Purinton "Granny" and Mr. Treadway's loco and it, too, has a superheater. The loco commenced its existence as a *Juliet* built exactly to print but as time went by many changes were made to the basic design in various details. I could write pages on the tests and results that were tabulated but will confine remarks to superheating, the question of the day.

The original 2-element superheater was of ¼" copper pipe. Suspecting the efficiency of same I made up a pocket from 3/8" pipe, brazed it to the hot header so the open end projects through the smokebox door. In this I place a mercury thermometer which reads to 750°F any time I wish to know the steam temperature. A pyrometer is not necessary for temperatures below 750°F. Numerous test runs with loads from 180 up to 700 lbs. gave readings of superheat of from practically nil up to 120°F.

A superheater does not work very well at the moment the engine is worked hard enough to pull the right size of coal into the flues. Usually when the loco slips on starting a big load there is a steaming problem until the trouble is rectified.

Neglecting the advice of our departed friend "Curly" *(LBSC)* I tried a brick arch on my 2½" gauge loco many years ago with beneficial results. When putting the 3½" gauge 0–4–0 to work I eventually found it necessary to use (what now appears to me to be an essential feature of any small steam loco using solid fuel) a brick arch. Mine are made of .063" stainless steel and to be effective they have to fit with no more than a 1/32" gap at front and sides of the plate. The general proportions are much as found in the firebox of a big loco.

A brick arch is desireable not only to cut down on fire lifting but also to even up the effect of the draft over the whole of the grate. It will also tend to reduce the amount of fly ash at the front end and should the superheater elements be half way across the firebox as mine are, the brick arch will considerably reduce the eroding effect of radiant heat on the hot end of the elements.

The aim in making up a new superheater extending into the firebox was to get really hot steam. The present double-return element is in effect a single pipe nearly four feet in length, made of 3/16" copper pipe with 1/8" bore. It would be nice to have superheaters of stainless steel, but I don't see any of the model supply houses having this exotic material listed. Does anyone know of a supplier who handles 3/16" or ¼" O.D. stainless steel pipe?

With the double-return superheater in use there was an improvement in liveliness; but most dramatic was the 50% improvement in both fuel and water mileage over Curly's setup. The steam temperature is around 600°F with a load of 160 lbs. on the flat car – with loads over 700 lbs. it goes up to 650°F. The *Juliet* is now showing a coal consumption of .75 lbs. per ton-mile.

GEORGE HILL
2551 OLD CARRIAGE ROAD
ROUTE 2
COOKSVILLE, ONTARIO, CANADA

...from the cupola

We didn't realize it at the time, but the April issue of LIVE STEAM turned out to be a sort of "Teen-Agers' Special" issue and we feel so good about it that we wish we could say it had been planned that way! In this day and age it is refreshing to see these youngsters make print in a constructive way and we want to do our small part here to see that it is accomplished.

Bill Cook was only 11 when he decided to build some models out of his own. Even though Bill is 16 now, the decision to *build* a piece of equipment then, rather than to stand back in the crowd and hope to get something "someday," has surely made its mark on his life.

Jim Turner is,we believe, in the eighth grade now and his efforts in his Dad's shop produced an award for him in the seventh grade! Jim had the opportunity to learn early about the pleasure that can come from working with tools and the satisfaction that can be gained from creating something lasting.

Photographer John Bardo is another of Bob Maynard's proteges and we are always glad to see John's photos of activities in the Cincinnati area.

There are literally hundreds of these young fellows around just waiting and dreaming of the day when they can "be old enough" to actually become involved in Live Steam. That time is right now, while their interest is strong enough to help them weather the discouragement of errors and other delays. Learning to use good tools and machinery at an early age can have a profound effect on their respect for other things and other people as they mature. How much better it is to learn about power and gear ratios on a 3½" gauge track in the back yard than in a drag race on a highway or city street.

Without the full-size steam that we had as kids to establish a love for the sight and sound and smell of a steam engine, these youngsters are going to have to rely on us to make these sights and sounds and smells more than conversation.

A "Go 'way, Boy, ya bother me" attitude will soon place us in a category with the G.A.R. – with the whole world waiting to see who will be the last surviving member of the B.L.S.

– W. C. F. –

An exclusive!

Ride the EARLY BIRD MIXED CONSIST

- Ride a working railroad thru the Smokies!
- Operating Shay locomotives!
- See railroading close up!
- Photograph the train in action!
- See Railroad Town U.S.A. Museum!

Ride the last remaining regularly scheduled mixed consist drawn exclusively by Shay steam locomotives. The Early Bird Mixed Consist departs at 8:45 A.M. Tuesday through Saturday. Other scheduled departures daily and Sunday are as follows: 11:00 A.M.; 12:15 P.M.; 1:30 P.M.; 2:45 P.M.; and 4:00 P.M.

FREE – Write for color folder

Bear Creek Junction R.R.

Route 3 Box LS, Robbinsville, N.C. 28771
U.S. 129 TOPTON, N.C. – NEAR U.S. 19

WINTON Live Steam Locomotives
1½" – 3" Scales
DIESEL – 15"

3RD EDITION CATALOG. Rough or machined castings, or ready to operate locomotives, rail, accessories, gift items, plus several pages of valuable engineering data. 11 x 8½". Catalog $2.00 in U.S.A. and Canada. 3rd class postpaid. Add 50¢ for 1st class, letter countries $0.90

WINTON ENGINEERING COMPANY - DEPT. N
P.O. Box 355 Danville, California 94526
Phone day or evening – (415) 837-4368

1½" Scale Cars
Assembled or Kit Form
Castings – Metal Parts – Lumber
Complete custom building service
Catalog 25¢

J & J MODELS
15712 South Condon Avenue
Lawndale, California 90260

Full-size drawings and castings for building the RARITAN

for further information write
William H. Morewood
18 Laning Avenue – Pennington, N.J. 08534

REAL STEAM TRAINS
15" – 16" – 24" – 36" Gauges

"LITTLE TOOT"
Send for FREE circular
CROWN METAL PRODUCTS CO.
WYANO, PENNSYLVANIA 15695

Binding service for 1967 LIVE STEAM Magazine
including Volume Six of the Live Steam Newsletter

Send your copies of LIVE STEAM with the Index included in the March 1968 issue* ..... $ 7.50
Replacement copies (while they last) ..... .35 each
Bound volume of all new issues ..... $12.00 each

*Allow six to eight weeks for delivery

Father's Day Suggestion:
(June 16th, 1968)

LIVE STEAM Magazine
Box 635 - Cadillac, Michigan 49601

Live Steam
MODEL ENGINEER

BULK RATE
U. S. POSTAGE
PAID
CADILLAC, MICHIGAN 49601
PERMIT #105

Post Office Box 635
Cadillac, Michigan 49601

ADDRESS CORRECTION REQUESTED.

Peter Spinney
36 Atlantic St.
Gloucester, Mass. 01930

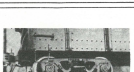

1½" scale roller bearing truck kits, coupler and draft gear kits and complete gondola kits. Illustrated brochure and photos - 25¢.

BUCKEYE
Model Car & Foundry
BOX 828 - PORTSMOUTH, OHIO 45662

1" scale trucks and car parts
Send for free list
NELSON W. GRAY
900 East Brighton Avenue
Jamesville, N. Y. 13078

SOON

THE CASTINGS FOR THIS PACIFIC...

AND MORE TO COME

CALDWELL INDUSTRIES
the NEW firm

Live Steam
Locomotives
1968 Catalog

Just bolt 'em together

You can have a backyard Railroad completely steam powered including all accessories. Complete line of ready-to-run locomotives, cars, etc. Just Together. Also available in rough form. Old time & modern engines & rolling stock in 1" scale. Send 25¢ for catalog. Refundable with first purchase. FREE STEAM PROGRESS NEWS in our 100-page catalog. Price $1.00
LITTLE ENGINES Box N, Lomita, Calif. 90717
Established 35 years

M & W
ZIMMER MODELS
P.O. Box 340
Argo, Illinois 60501

***NEW* 1½" Scale 36'-6" STOCK CAR**

Completely Assembled or Kit Form
ALSO
Semi-Assembled Kit Form
MILLED SCALE LUMBER FOR CARS AND STRUCTURES
NO RAILROAD IS COMPLETE WITHOUT A STOCK CAR
Send 25¢ in coin for information

***THE* -1900 Vintage**
Stock Car & Scale Lumber